MR11

DESCRIPTION

The Brilliance LED MR11 Bipin is designed to better fit into standard, low voltage, MR11 fixtures and have a longer lamp life. These LEDs are thermally engineered to operate in enclosed fixtures and provide added security by automatically cooling down, and reducing lumen output when exposed to extreme heat (air temperatures above 125˚F). There is no color shift when lumen output is reduced.

FEATURES

- Gen 5 earth tone colored housing
- Dimmable with most magnetic transformers
- Enhanced ESD (Electro-Static Discharge) protection (IEC-61000-4-2)
- Heat overload protection technology
- Fully potted PC board
- UL & FCC compliant

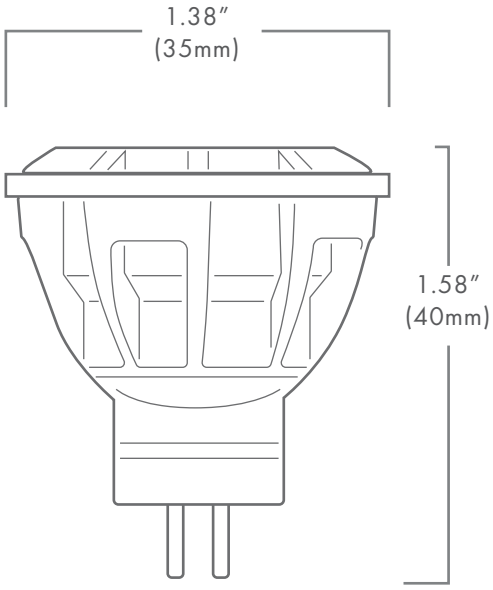

Part Number: **MR11-2-XXXX-XXX**

Kelvin/ Color | Beam spread

Wattage	**2**
Lumens	**120**
Beam Spread	**15˚, 30˚, 60˚, 120˚**
Kelvin Temperature	**2200, 2700, 3000, 5700**
Color	**Red, Green, Blue, Amber**
Operating Range	**8-25 VAC**
Replaces	**20W Halogen**
CRI	**85**
IP	**61**
Chipset	**CREE**
Lamp Life (hours)	**50,000**
Warranty (years)	**5**