UNIQUE
LIGHTING SYSTEMS®

Illuminator 4 & 6

Area Light
Knights Series

PRODUCT SPECIFICATIONS

PROJECT:	

MODEL #:	
LAMP(S):	
NOTES:	

360° BEAM SPREAD
82+ CRI
COPPER
25' WIRE LEAD
AMC
HUB READY

Frosted Lens

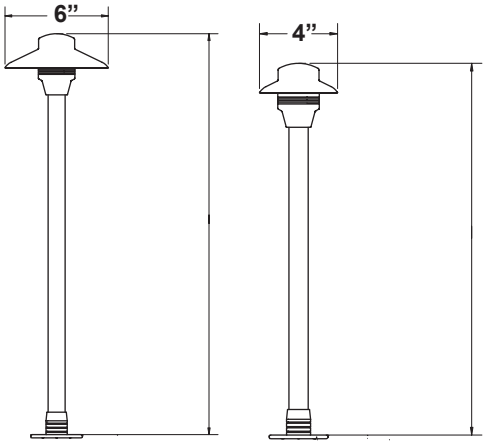

I6= (Std.) 21" Overall height
I612= 15" Overall height
I624= 27" Overall height
I636= 39" Overall height
I648= 51" Overall height

I4= (Std.) 20.5" Overall height
I412= 14.5" Overall height
I424= 26.45" Overall height
I436= 38.5" Overall height
I448= 50.5" Overall height

Specifications:

- Solid copper construction
- Machined brass collar
- High temperature double o-ring retention collar
- Specification grade beryllium copper socket
- Premium grade direct burial cable
- Frosted borosilicate lens
- 2W max. LED lamp / 20W max. halogen
- Large Stabilizer mounting stake included
- Natural copper finish standard
- Satin copper finish standard (Illuminator 6 only)
- 15 year warranty

Light Distribution Cones
N/A

TÜV Rheinland
C US
UL 2108:2004 R12.07
CSA C22.2.9.0-96 (R2006)

Unique Lighting Systems® reserves the right to modify the design and/or construction of the fixture shown without further notification.

UNIQUE
LIGHTING SYSTEMS®

Illuminator 4 & 6
Area Light
Knights Series

Fixtures

Part Number	Description
I4-12-L1	ILM4 COP 12V LED 1W 30K 25'WL NC
I4-12-L2	ILM4 COP 12V LED 2W 30K 25'WL NC
I4-12-L27	ILM4 COP 12V LED 2W 27K 25'WL NC
I4-NL	ILM4 COP NL 25'WL NC
I4-NL-0	ILM4 COP NL NWL NC
I4-NL-50	ILM4 COP NL 50'WL NC
I412-NL	ILM4 COP 12" STEM NL 25'WL NC
I424-NL	ILM4 COP 24" STEM NL 25'WL NC
I436-NL	ILM4 COP 36" STEM NL 25'WL NC
I448-NL	ILM4 COP 48" STEM NL 25'WL NC
ILLUM4REP	ILM4 COLLAR, LENS, SHROUD
I6-12-L1	ILM6 COP 12V LED 1W 30K 25'WL NC
I6-12-L2	ILM6 COP 12V LED 2W 30K 25'WL NC
I6-12-L27	ILM6 COP 12V LED 2W 27K 25'WL NC
I6-NL	ILM6 COP NL 25'WL NC
I6-NL-0	ILM6 COP NL NWL NC
I6-NL-50	ILM6 COP NL 50'WL NC
I612-NL	ILM6 COP 12" STEM NL 25'WL NC
I624-NL	ILM6 COP 24" STEM NL 25'WL NC
I636-NL	ILM6 COP 36" STEM NL 25'WL NC
I648-NL	ILM6 COP 48" STEM NL 25'WL NC
ILLUM6REP	ILM6 COLLAR, LENS, SHROUD
I6-12-L1SC	ILM6,COP,12V,LED,1W,30K,25'WL,SC
I6-12-L27SC	ILM6,COP,12V,LED,2W,27K,25'WL,SC
I6-12-L2SC	ILM6,COP,12V,LED,2W,30K,25'WL,SC
I6-NL-0SC	ILM6 COP NL NWL SC
I6-NL-50SC	ILM6 COP NL 50'WL SC
I6-NLSC	ILM6 COP NL 25'WL SC
I612-NLSC	ILM6 12" COP NL 25'WL SC
I624-NLSC	ILM6 24" COP NL 25'WL SC
I636-NLSC	ILM6 36" COP NL 25'WL SC
I648-NLSC	ILM6 48" COP NL 25'WL SC
ILLUM6REPSC	I6 COLLAR SHROUD SC LENS

Accessories

Part Number	Description
SPHEREBASE SB	Round Mounting Base
ZEROG	Docking Post
6COPRISER	6" Brass Riser
12COPRISER	12" Brass Riser
24COPRISER	24" Brass Riser

Finishes

Standard Finish
NC - Natural Copper
SC - Satin Copper (Illuminator 6 only)

Powder Coated Finishes
WH - White
BK - Black
VG - Verde Green
TT - Tucson Tan
TK - Titanium Knight

Custom Colors
P - Painted

Stock powder coated colors displayed are subject to varying lead-times and will incur an additional cost. A Limited Warranty applies to all powder coated products.

Custom colors are available upon request. Please inquire about cost and lead times. Contact factory for custom colors and matching paint options.